2+1C 2196

WEST BRIDGE CORPORATION

NAHATLATCH RIVER BRIDGE UPGRADING

FROM L60 TO L75

REFERENCE DRAWING LIST	
DWG. NO.	DRAWING TITLE
WB190-1	GENERAL ARRANGEMENT
WB190-2	ABUTMENTS
WB190-3	PIERS
WB190-4	SOUTH SPAN SUPERSTRUCTURE
WB190-5	MAIN SPAN SUPERSTRUCTURE
WB190-6	NORTH SPAN SUPERSTRUCTURE
WB190-7	STEEL DTLS. & LAUNCHING ARRANGEMENT

DRAWING LIST	
DWG. NO.	DRAWING TITLE
101	GENERAL NOTES SHEET 1
102	GENERAL NOTES SHEET 2
103	BRIDGE PLAN & ELEVATIONS
104	CONCRETE DECK PANEL REINFORCEMENT
105	CONCRETE DECK PANEL DETAILS
106	BEARING DETAILS SHEET 1
107	BEARING DETAILS SHEET 2

ALL-SPAN
ENGINEERING & CONSTRUCTION LTD.

#201 – 7198 VANTAGE WAY
DELTA, B.C. V4G 1K7

PH: (604) 940-2212 FAX: (604) 940-1516

ALL RIGHTS RESERVED PROPERTY OF ALL SPAN ENGINEERING AND CONSTRUCTION LTD. USE OR REPRODUCTION WITHOUT PRIOR WRITTEN PERMISSION IS PROHIBITED.

REF: M BORD A.DWG CAD: JOB\97116\97116 1.D

GENERAL NOTES

PROJECT NO.: 97116

PROJECT TITLE: NAHATLATCH RIVER BRIDGE UPGRADING FROM L60 TO L75

CLIENT: WEST BRIDGE CORPORATION

REFERENCE DRAWINGS:

TITLE	DWG. NO.	CONSULTANT
SEE COVER SHEET FOR REFERENCE DRAWINGS		

1.0 GENERAL CONDITIONS

1.1 WHERE APPLICABLE, WORKS ARE TO COMPLY WITH (AS A MINIMUM) REGULATIONS AND REQUIREMENTS IMPOSED BY THE FOLLOWING :

B.C. MINISTRY OF FORESTS
B.C. MINISTRY OF ENVIRONMENT, LANDS AND PARKS
WORKERS' COMPENSATION BOARD OF B.C.
ENVIRONMENT CANADA
FISHERIES AND OCEANS CANADA
NAVIGABLE WATERS PROTECTION ACT

1.2 THE CONTRACTOR ALONE IS RESPONSIBLE FOR ENSURING SAFETY IN AND AROUND THE JOB SITE. PROPER AND SAFE METHODS OF CONSTRUCTION SHALL BE USED AT ALL TIMES. AS A MINIMUM, THE REQUIREMENTS OF THE LATEST EDITION OF THE WCB INDUSTRIAL HEALTH AND SAFETY REGULATIONS PUBLICATION, CANADIAN CONSTRUCTION SAFETY CODE AND THE PROVINCIAL GOVERNMENT SHOULD BE ADHERED TO.
WHERE THERE ARE ANY DISCREPANCIES BETWEEN THE ABOVE, THE MOST STRINGENT SHALL APPLY.

1.3 THE CONTRACTOR IS TO BE RESPONSIBLE FOR DIMENSIONS IN THE FIELD TO SUIT EXISTING CONDITIONS. THE CONTRACTOR IS TO SITE MEASURE AND CONTROL PRODUCTION OF WORK ON SITE AND ELSEWHERE TO FULFILL THE INTENT OF THE DRAWINGS.
ALL-SPAN IS TO BE NOTIFIED OF ANY VARIATIONS IN EXISTING CONDITIONS THAT MAY AFFECT THE STRUCTURE.

2.0 DESIGN LOADS

DESIGN CONFORMS TO CAN/CSA S6-88 (MODIFIED). DESIGN LOAD AS INDICATED BELOW:

DESIGN TRUCK L75

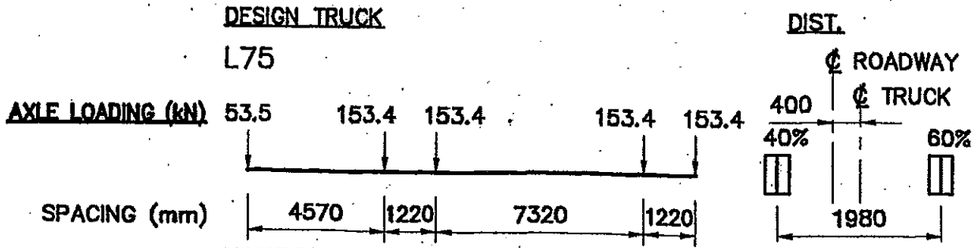

FATIGUE LOAD (500 000 CYCLES) L75

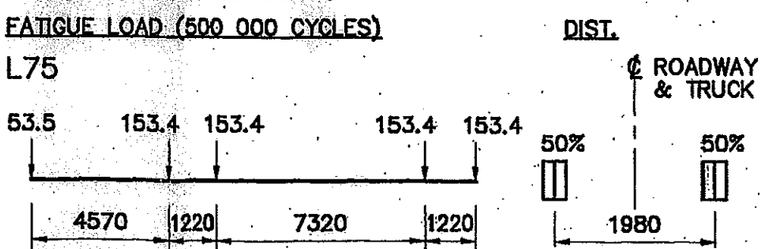

MODIFICATIONS / ADDITIONS TO THE ABOVE:
CAT 980 LOADER WITH ONE DECK PANEL : WT. = 333 kN. (75 000 lbs.)

LOADER IS NOT TO TRAVEL OVER CONCRETE DECK PANELS UNTIL GROUTED

CONTRACTOR OR OWNER IS TO NOTIFY ALL-SPAN SHOULD IMPOSED LOADS DURING CONSTRUCTION OR IN-SERVICE DIFFER FROM THOSE NOTED ABOVE.

DETLEF [illegible] BRITISH COLUMBIA ENGINEER

REV.	DESCRIPTION	DATE
B	AS BUILT	06/02/98
A	ISS. FOR CONSTRUCTION	23/10/97

DATE 15/09/97
SCALE AS NOTED
DRAWN BY W.G.
DESIGN BY B.G.
CHECKED BY D.M.
APPROVED
PROJECT No. 97116 REV. B
DRAWING No. 101

CLIENT: WEST BRIDGE CORPORATION
PROJECT: NAHATLATCH RIVER BRIDGE UPGRADE FROM L60 TO L75
DRAWING TITLE: GENERAL NOTES SHEET 1

ALL-SPAN ENGINEERING & CONSTRUCTION LTD.
#201 – 7198 VANTAGE WAY.
DELTA, B.C. V4G 1K7
PH: (604) 940-2212 FAX: (604) 940-1516

ALL RIGHTS RESERVED PROPERTY OF ALL SPAN ENGINEERING AND CONSTRUCTION LTD. USE OR REPRODUCTION WITHOUT PRIOR WRITTEN PERMISSION IS PROHIBITED.

DATE	15/09/97	
SCALE	AS NOTED	
DRAWN BY	W.G.	
DESIGN BY	B.G.	
CHECKED BY	D.M.	
APPROVED		
PROJECT No.	97116	
DRAWING No.	103	

REV.	DESCRIPTION	DATE
H		
G		
F		
E		
D		
C		
B	AS BUILT	06/02/98
A	ISS. FOR CONSTRUCTION	23/10/97

CLIENT
WEST BRIDGE CORPORATION

PROJECT
NAHATLATCH RIVER BRIDGE UPGRADE FROM L60 TO L75

DRAWING TITLE
BRIDGE PLAN & ELEVATIONS

ALL-SPAN
ENGINEERING & CONSTRUCTION LTD.
#201 – 7198 VANTAGE WAY
DELTA, B.C. V4G 1K7

REF: M_BORD_A.DWG CAD: JOB\97116\97116_1.DWG

ALL RIGHTS RESERVED PROPERTY OF ALL SPAN ENGINEERING AND CONSTRUCTION LTD. USE OR REPRODUCTION WITHOUT PRIOR WRITTEN PERMISSION IS PROHIBITED.

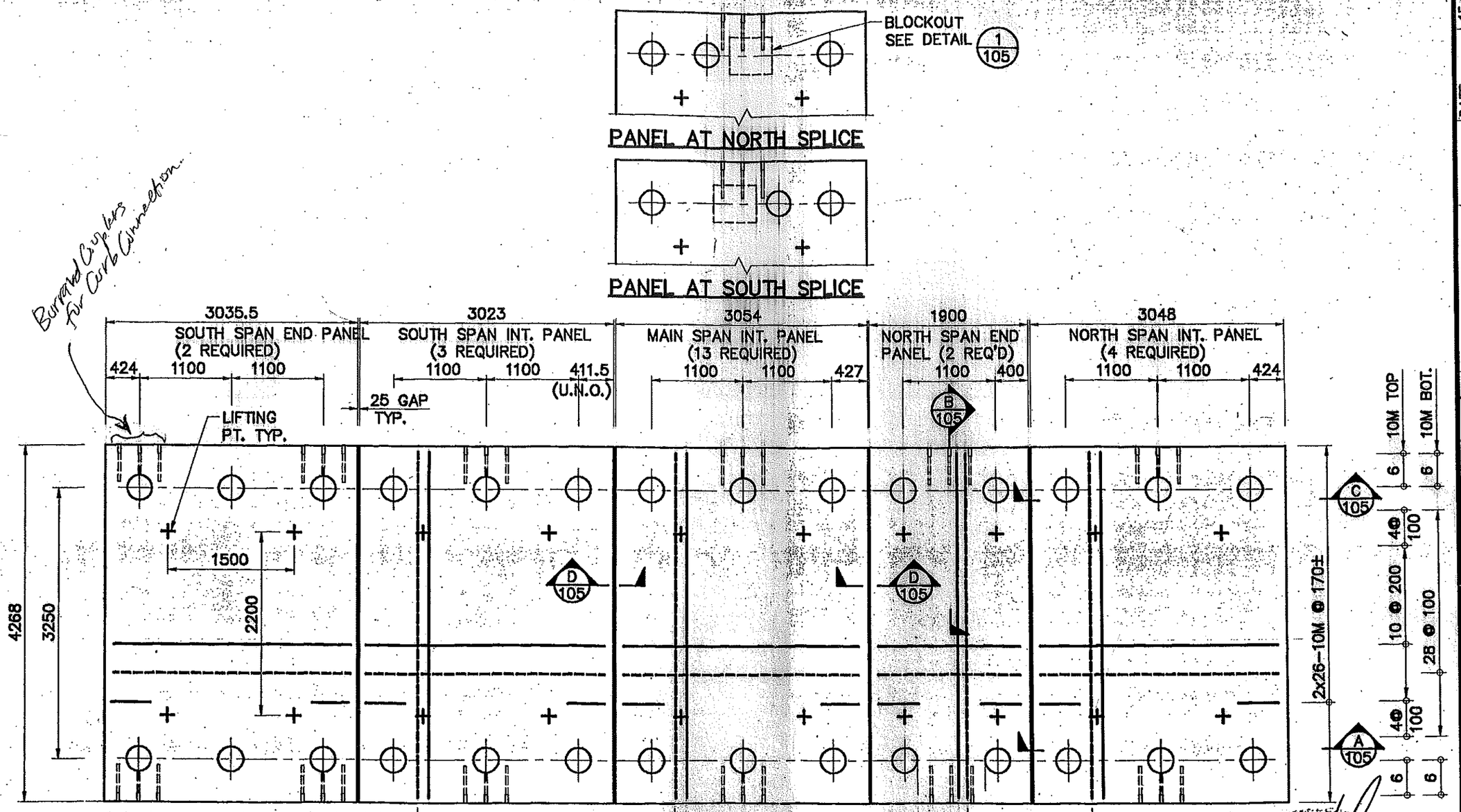

COMPOSITE DECK PANEL REINF. PLANS

1:50

REV.	DESCRIPTION	DATE
A	ISS. FOR CONSTRUCTION	23/10/97
B	AS BUILT	06/02/98
C		
D		
E		
F		
G		
H		

DATE 15/09/97
SCALE AS NOTED
DRAWN BY W.G.
DESIGN BY B.G.
CHECKED BY D.M.
APPROVED
PROJECT No. 97116 REV. B
DRAWING No. 104

CLIENT
WEST BRIDGE CORPORATION

PROJECT
NAHATLATCH RIVER BRIDGE
UPGRADE FROM L60 TO L75

DRAWING TITLE
CONCRETE DECK
PANEL REINFORCEMENT

ALL-SPAN
ENGINEERING & CONSTRUCTION LTD.
#201 – 7198 VANTAGE WAY
DELTA, B.C. V4G 1K7
PH: (604) 940-2212 FAX: (604) 940-1516

PROFESSIONAL ENGINEER PROVINCE OF BRITISH COLUMBIA DETLEF MORDHORST ENGINEER

ALL RIGHTS RESERVED PROPERTY OF ALL SPAN ENGINEERING AND CONSTRUCTION LTD. USE OR REPRODUCTION WITHOUT PRIOR WRITTEN PERMISSION IS PROHIBITED.

REF: M_BORD_A.DWG CAD: JOB\97116\97116_1.DWG

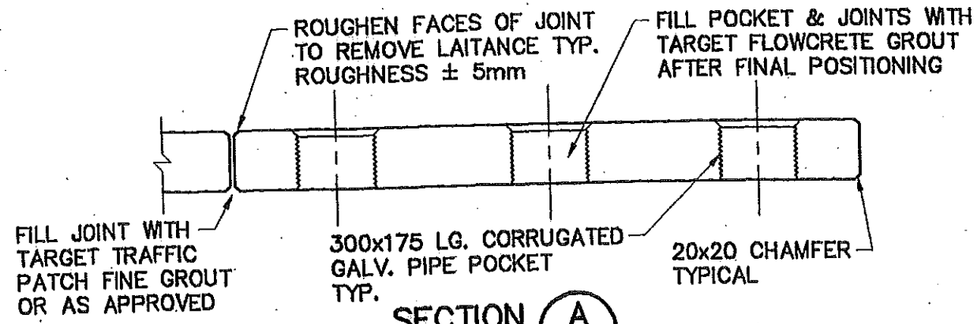

SECTION A/104
1:25

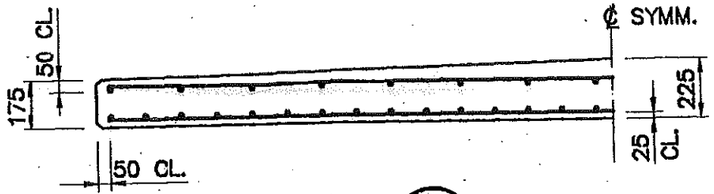

SECTION B/104
1:25

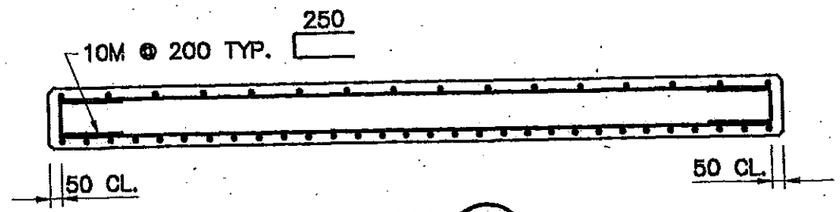

SECTION C/104
1:25

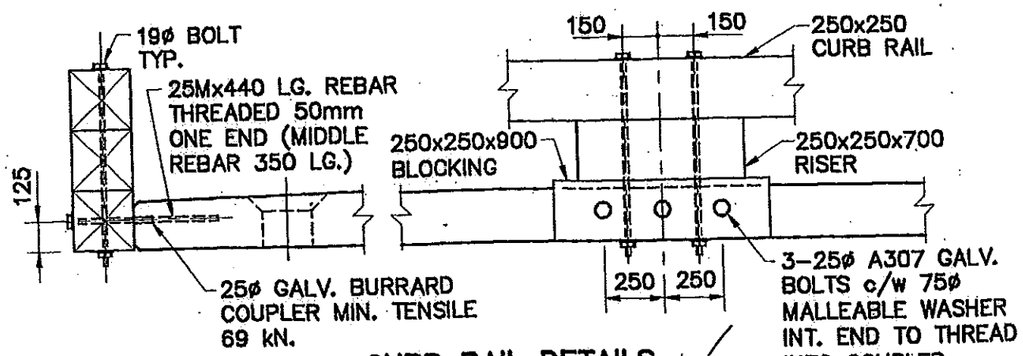

CURB RAIL DETAILS
1:25

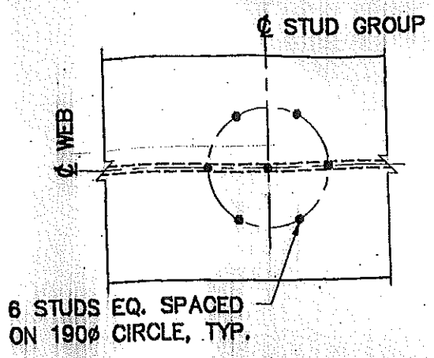

FOR GROUP SPACING SEE ELEVATION
7 STUD GROUP PLAN
1:10

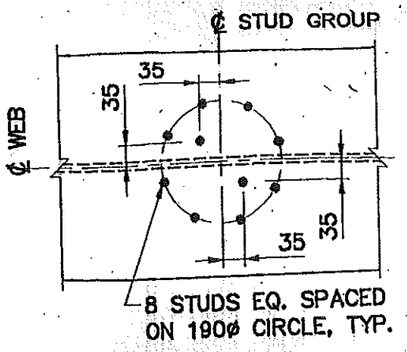

FOR GROUP SPACING SEE ELEVATION
10 STUD GROUP PLAN
1:10

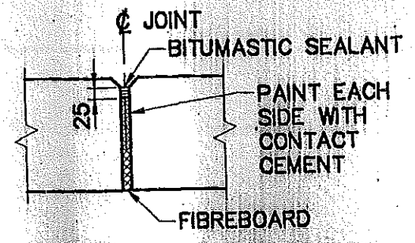

TYP. NON-COMPOSITE PANEL JOINT DETAIL D/104
1:10

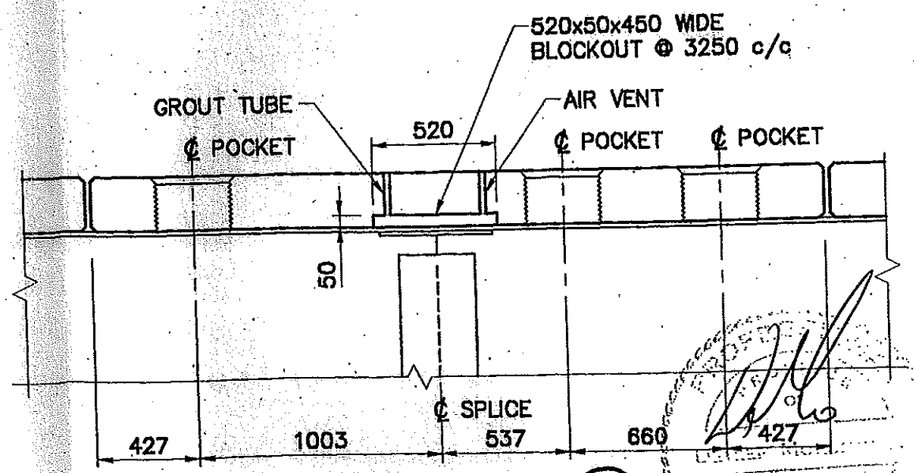

DECK DETAIL 1/104
1:25

REV.	DESCRIPTION	DATE
H		
G		
F		
E		
D		
C		
B	AS BUILT	06/02/98
A	ISS. FOR CONSTRUCTION	23/10/97

DATE	15/09/97
SCALE	AS NOTED
DRAWN BY	W.G.
DESIGN BY	B.G.
CHECKED BY	D.M.
APPROVED	
PROJECT No.	97116
DRAWING No.	105
REV.	B

CLIENT
WEST BRIDGE CORPORATION

PROJECT
NAHATLATCH RIVER BRIDGE UPGRADE FROM L60 TO L75

DRAWING TITLE
CONCRETE DECK PANEL DETAILS

ALL-SPAN
ENGINEERING & CONSTRUCTION LTD.
#201 – 7198 VANTAGE WAY
DELTA, B.C. V4G 1K7
PH: (604) 940-2212 FAX: (604) 940-1516

REF: M_BORD_A.DWG CAD: JOB\97116\97116_1.DWG

ALL RIGHTS RESERVED PROPERTY OF ALL SPAN ENGINEERING AND CONSTRUCTION LTD. USE OR REPRODUCTION WITHOUT PRIOR WRITTEN PERMISSION IS PROHIBITED.

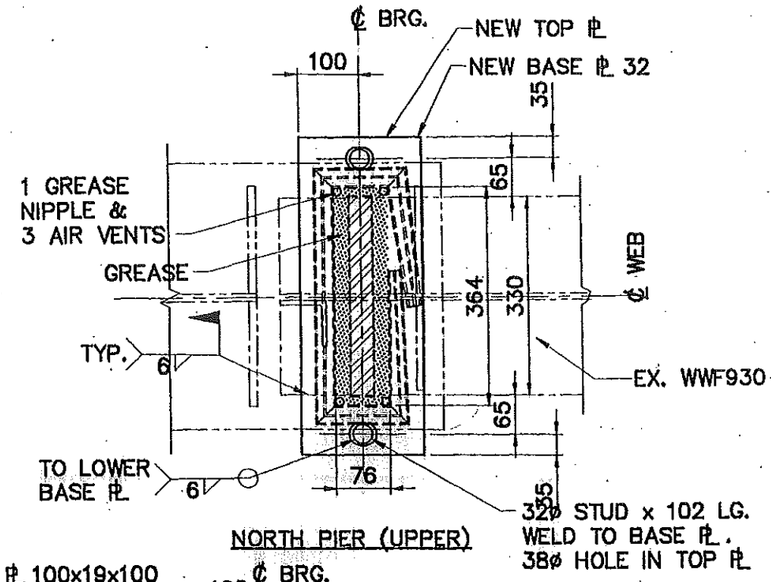

NORTH PIER (UPPER)

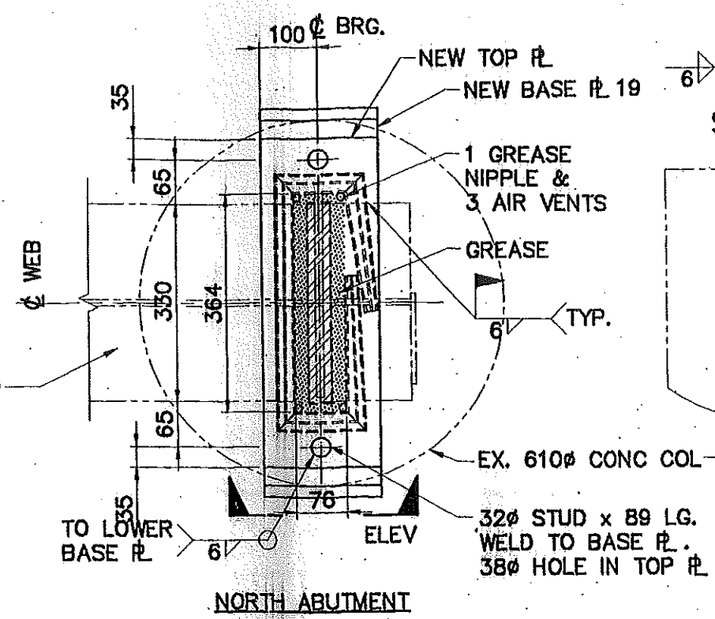

NORTH ABUTMENT

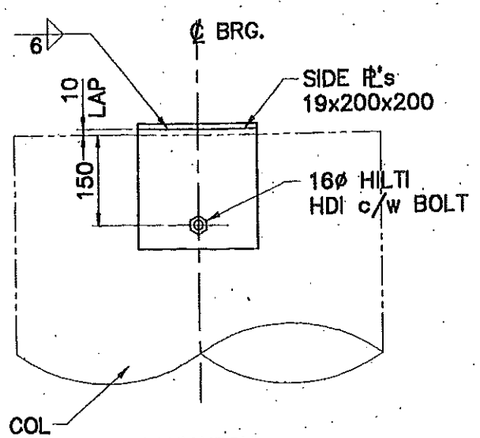

ELEVATION

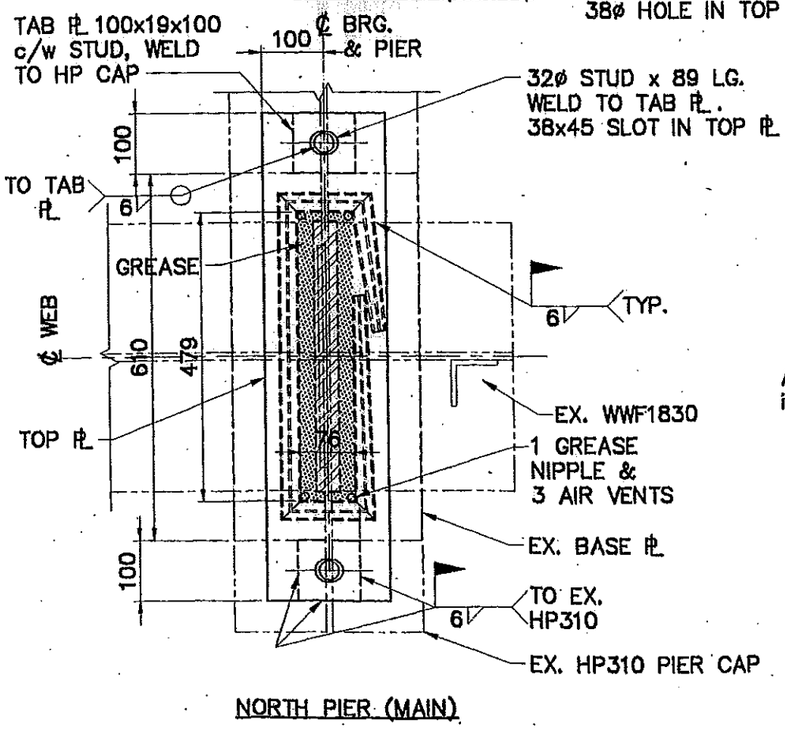

NORTH PIER (MAIN)

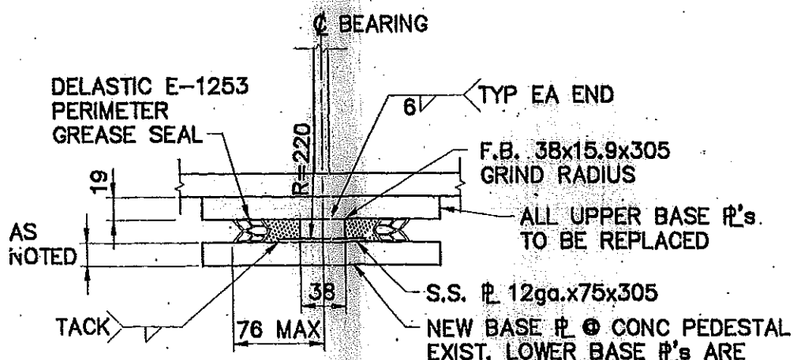

BEARING DETAIL
1:5

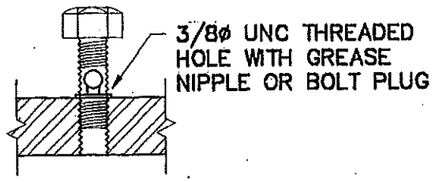

HOLE DETAIL
HALF SIZE

NORTH BEARING PLANS
1:10

REV.	DESCRIPTION	DATE
B	AS BUILT	06/02/98
A	ISS. FOR CONSTRUCTION	23/10/97

DATE	22/10/97
SCALE	AS NOTED
DRAWN BY	R.W.
DESIGN BY	B.G.
CHECKED BY	D.M.
APPROVED	
PROJECT No.	97116 REV
DRAWING No.	107 B

CLIENT
WEST BRIDGE CORPORATION

PROJECT
NAHATLATCH RIVER BRIDGE
UPGRADE FROM L60 TO L75

DRAWING TITLE
BEARING DETAILS
SHEET 2

ALL-SPAN
ENGINEERING & CONSTRUCTION LTD.
#201 – 7198 VANTAGE WAY
DELTA, B.C. V4G 1K7
PH: (604) 940-2212 FAX: (604) 940-1516

ALL RIGHTS RESERVED PROPERTY OF ALL SPAN ENGINEERING AND CONSTRUCTION LTD. USE OR REPRODUCTION WITHOUT PRIOR WRITTEN PERMISSION IS PROHIBITED.

REF: M_BORD_A.DWG CAD: JOB\97116\97116 1.DWG